UNIT 1 INTRODUCTION TO NC MACHINE TOOLS

Structure

1.1 INTRODUCTION

NC machines, advantages of NC machines, Types of NC systems, Controlled axes, Basic Components of NC Machines, Problems with Conventional NC and Principles of NC Machines are described in this Unit.

Objectives

After studying this unit, you should be able to understand

- ,
- ,
- , and
- .

1.2 NC MACHINES

Controlling a machine tool by means of prepared program, which consists of blocks, or series of numbers, is know as numerical control (NC). In manufacturing of more complicated parts, the system has to calculate automatically additional data points, which is done by means of an interpolator. Numerical Control (NC) refers to the method of controlling the manufacturing operation by means of directly inserted coded numerical instructions into the machine tool. It is important to realize that NC is not a machining method; rather, it is a concept of machine control. Although the most popular applications of NC are in machining, NC can be applied to many other operations, including welding, sheet metalworking, riveting, etc.

NC machines are method of automation, where automation of medium and small volume production is done by some controls under the instructions of a program. Various definitions of NC are :

A system in which actions are controlled by direct insertion of Numerical Data at some point. The system must automatically interpret at least some portion of this data by Electronic Industries Association (*EIA*).

Numerical Control is defined as a form of software controlled automation, in which the process is controlled by alphanumeric characters or symbols.

According to these definitions, a programme is prepared which consists of blocks, blocks consisting of combination of characters and numbers in sequence describing the position of the tool and job, the cutting speed and feed. The data converted into coded instructions which are called a Part Programme. As the job changes, the instructions of part program are also changed. The other instructions which can be included may be for tool changing or coolant on and off. It is easy to encode a new programme than to change the machinery for flexibility, thus arising the need of an NC machine tool.

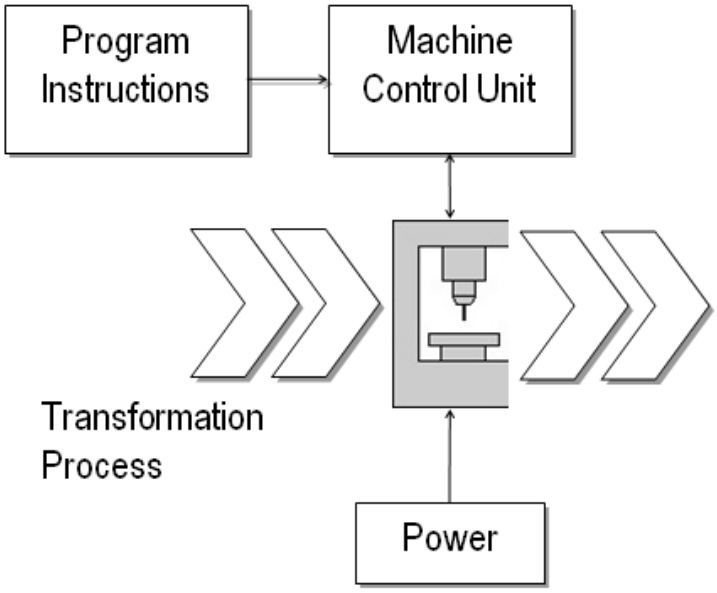

Figure 1.1 : Numerical Control (NC) Machine Tool

Advantages of NC

The major advantages of NC over conventional methods of machine control are as follows :

Higher Precision

NC machine tools are capable of machining at very close tolerances, in some operations as small as 0.005 mm.

Better Quality

NC systems are capable of maintaining constant working conditions for all parts in a batch thus ensuring less spread of quality characteristics.

Higher Productivity

NC machine tools reduce drastically the non machining time. Adjusting the machine tool for a different product is as easy as changing the computer program and tool turret with the new set of cutting tools required for the particular part.

Multi-operational Machining

Some NC machine tools, for example machine centers, are capable of accomplishing a very high number of machining operations thus reducing significantly the number of machine tools in the workshops.

Low Operator Qualification

The role of the operation of a NC machine is simply to upload the work piece and to download the finished part. In some cases, industrial robots are employed for material handling, thus eliminating the human operator.

Less Time

An easy adjustment of the machine, adjustment requires less time.

1.2.1 Types of NC System

Machine controls are divided into three groups:

(a) Traditional numerical control (NC);

(b) Computer numerical control (CNC);

(c) Distributed numerical control (DNC).

The original numerical control machines were referred to as NC machine tool. They have “hardwired” control, whereby control is accomplished through the use of punched paper (or plastic) tapes or cards. Tapes tend to wear, and become dirty, thus causing misreading. Many other problems arise from the use of NC tapes, for example the need to manual reload the NC tapes for each new part and the lack of program editing abilities, which increases the lead time. The end of NC tapes was the result of two competing developments, CNC and DNC.

CNC refers to a system that has a local computer to store all required numerical data. While CNC was used to enhance tapes for a while, they eventually allowed the use of other storage media, magnetic tapes and hard disks. The advantages of CNC systems include but are not limited to the possibility to store and execute a number of large programs (especially if a three or more dimensional machining of complex shapes is considered), to allow editing of programs, to execute cycles of machining commands, etc.

The development of CNC over many years, along with the development of local area networking, has evolved in the modern concept of DNC. Distributed numerical control is similar to CNC, except a remote computer is used to control a number of machines. An off-site mainframe host computer holds programs for all parts to be produced in the DNC facility. Programs are downloaded from the mainframe computer, and then the local controller feeds instructions to the hardwired NC machine. The recent developments use a central computer which communicates with local CNC computers (also called Direct Numerical Control).

1.2.2 Controlled Axes

NC system can be classified on the number of directions of motion they are capable to control simultaneously on a machine tool. Each free body has six degree of freedom, three positive or negative translations along *x*, *y*, and *z*-axis, and three rotations clockwise or counter clockwise about these axes.

Commercial NC system is capable of controlling simultaneously two, two and half, three, four and five degrees of freedom, or axes. The NC systems which control three linear translations (3-axis systems), or three linear translations and one rotation of the worktable (4-axis systems) are the most common.

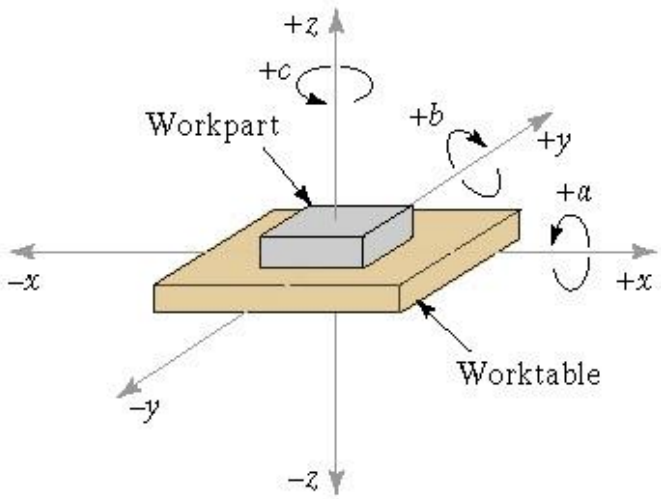

Figure 1.2 : Coordinate System (Milling and Drilling Operations)

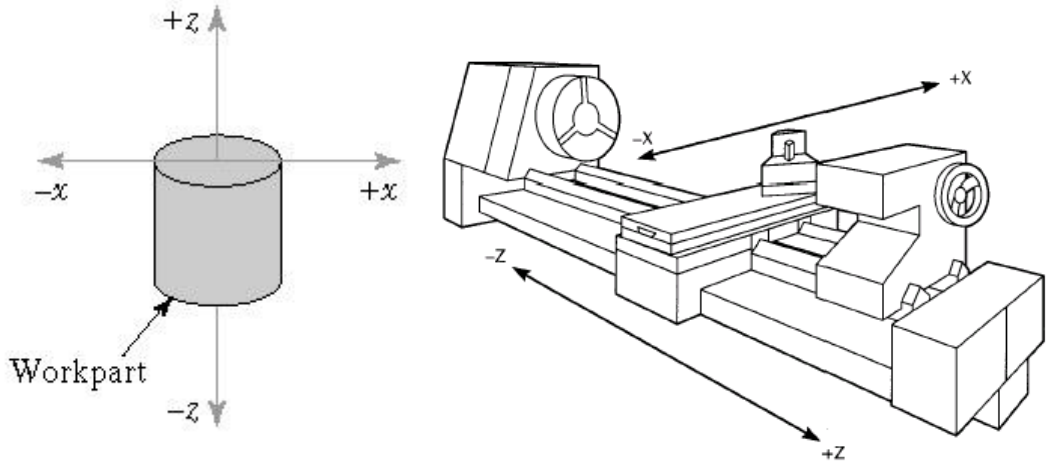

Figure 1.3 : Coordinate System (Turning Operations)

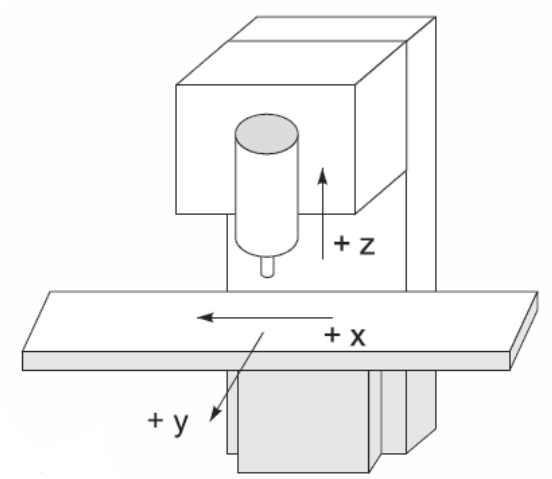

Figure 1.4 : Coordinate System (Milling and Drilling Operations)

1.2.3 Basic Components of NC Machines

Software

The programmes or set of instructions, languages, punched cards, magnetic tape, punched paper tape and other such information processing items are referred to as software. This software controls the sequence of movement of an NC. That is why these numerical controls are sometimes called software controlled machines by NC lies entirely in the programming. The programmer plans the operations and their sequence from seeing the drawing and writes instructions in tabulated blocks of information, known as Part Programme on a programme manuscript. Then these instructions are punched on the control tape. Tape reader reads the codes and sends it to Machine Control Unit, which conversely converts them into the machine movements of machine tool.

Machine Control Unit (MCU)

NC machine tool has a main unit, which is known as Machine Control Unit, consists of some electronic hardware that reads the NC programme, interprets it and conversely translates it for mechanical actions of the machine tool.

A typical Machine Control Unit may consist of the following units :

Input or Reader Unit

This unit consists of electro-mechanical devices used to collect the input from punched tape, cards, magnetic tape and disk. Then drive it through the system under a reading head, interpret the coded information and collect it again for reuse.

Memory

A block of information, consisting of words, is read from tape and stored into temporary memory called buffer. One block may contain one complete set of instruction words in sequence. The function of this memory is to keep on storing the next block of words when the machine is doing processing of previous block.

Processor

The function of the processor is to coordinate and control the functions of other units, by giving ready signals to them at appropriate point of time.

Output Channels

The data stored in the memory is converted into actuation signal and supplied through output channels in the form of pulses.

Control Panel

The control panel has the switches, indicators, Manual Data Input (MDI) and dials for providing information to the operator.

Feedback Channels

Feedback channel is to check whether the operations are done in the way we want to, the feedback is sent through feedback channels by position and velocity.

The MCU may be of three types :

Housed MCU

Machine Control Unit may be mounted on the machine tool or may be built in the casing of the machine.

Swing Around MCU

Machine Control Unit is directly mounted on the machine, which can swing around it and can be adjusted as per requirement of the operator's position.

Stand Alone MCU

Machine Control Unit is enclosed in a separate cabinet which is installed at some remote or same place near to the machine.

Machine Tool

Machine tool is the main components of a numerical control system, which executes the operations. It may consist of worktable, cutting tools, jigs and fixtures, motors for driving spindle and coolant and lubricating system. The latest development in the numerical control machine tool is the versatile machining center. This is a single machine capable of doing a number of operations such as milling, boring, drilling, reaming, and tapping by Automatic Tool Changer (ATC) under the control of tool selection instruction.

1.2.4 Problems with Conventional NC

The problems arise in the conventional NC system are the following :

Punched Tape

It is an unreliable NC component for repeated use in the shop because of paper tape is especially fragile and its susceptibility to wear and tear.

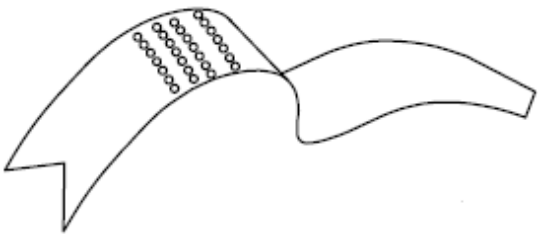

Figure 1.5 : Punched Tape

Tape Reader

Tape reader is the least reliable hardware components of the machine while any breakdown is occurred on an NC machine.

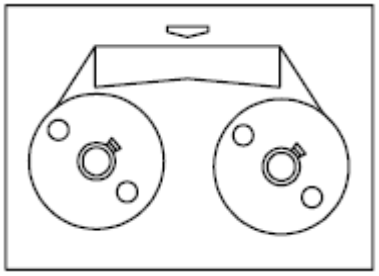

Figure 1.6 : Tape Reader

Controller

The hard-wired controller cannot be easily altered to incorporate improvements into the unit.

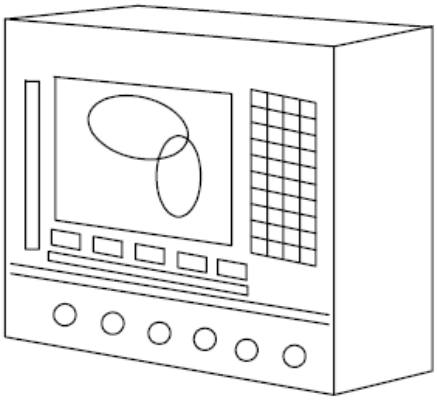

Figure 1.7 : Controller

Management Information

The machine tool manufacturers have been continually improving NC technology by redesigning the systems to provide timely information such as piece counts, machine tool change, etc. to the management.

Part Programming Mistakes

When preparing the punched tape, part programming mistakes are common and to achieve the best sequence of processing steps.

Non-optimal Speed and Feed

The control system does not provide the provision to change the speed and feed during the cutting operation.

1.3 PRINCIPLES OF NC MACHINES

The basic elements and operation of a typical NC machine in numerical control and the components basically involved of data input, data processing and data output. For data input, numerical information is read and stored in the tape reader or in computer memory. In data processing, the programs are read into machine control unit for processing. For data output, this information is translated into commands, typically pulsed commands to the motor. The motor moves the table on which the work piece is placed to specified positions, through linear or rotary movements, by the motors, ball screw, and others devices.

A NC machine can be controlled through two types of circuits, which is open loop and closed loop. In the open loop system, the signals are given to the motor by the processor,

but the movements and final destinations of the worktable are not accurate. The open loop system cannot accurate, but it still can produce the shape that is required. The closed loop system is equipped with various transducers, sensors, and counters that measure the position of the table accurately. Through feedback control, the position of the worktable is compared against the signal. Table movements terminate when the proper coordinates are reached. For the close loop system normally servomotor is utilized. For open loop system normally the stepper motor is utilized. The closed loop system is more complicated and more expensive than the open loop.

There are two basic types of control systems in numerical control, point-to-point and contouring. In point-to-point system, also called positioning, each axis of the machine is driven separately by ball screw, depending on the type of operation, at different velocities. The machine moves initially at maximum velocity in order to reduce nonproductive time, but decelerates as the tool reaches its numerically defined position. Thus in an operation such as drilling or punching, the positioning and cutting take place sequentially. The time required in the operation is minimized for efficiency.
Point-to-point systems are used mainly in drilling, punching, and straight milling operations.

In the contouring system, also known as the continuous path system, positioning and cutting operations are both along controlled paths but at different velocities. Because the tool cuts as it travels along the path, accurate control and synchronization of velocities and movements are important. The contouring system is used on lathes, milling machines, grinders, welding machinery and machining centers.

1.4 SUMMARY

1.5 ANSWERS TO SAQs

Refer the preceding text for all the Answers to SAQs.