UNIT 6 INTRODUCTION TO BALANCING

Structure

6.1 INTRODUCTION

In the system of rotating masses, the rotating masses have eccentricity due to limited accuracy in manufacturing, fitting tolerances, etc. A mass attached to a rotating shaft will rotate with the shaft and if the centre of gravity of the rotating mass does not lie on the axis of the shaft then the mass will be effectively rotating about an axis at certain radius equal to the eccentricity. Since the mass has to remain at that radius, the shaft will be pulled in the direction of the mass by a force equal to the centrifugal force due to inertia of the rotating mass. The rotating centrifugal force provides harmonic excitation to system which thereby causes forced vibration of the machines. We will discuss how such a force can be balanced to remove the effect of unbalance. The unbalance is expressed as product of mass and eccentricity.

Objectives

After studying this unit, you should be able to understand

- what is unbalanced force, and the effect of this,
- how is unbalanced force due to single rotating mass balanced, and
- how is unbalanced force due to several rotating masses in the same plane determined?

6.2 FORCE ON SHAFT AND BEARING DUE TO SINGLE REVOLVING MASS

Figure 6.1 shows a revolving mass attached to a horizontal shaft, which is supported by two bearings. The mass M is at a radius r from the axis of the shaft. The mass is attached to the shaft at a distance a from bearing on the left and at distance b from right hand bearing so that the span of the shaft between the bearings is $a + b$. The eccentricity is due to the tolerances assigned, the limited accuracy of the manufacturing machines and non-homogenity of the material.

The shaft is rotating with an angular velocity ω rad/s. A dynamic force F will pull the shaft towards the connected mass M. The magnitude of F is given by

$$F = M\ \omega^2\ r \qquad \ldots (6.1)$$

The force F will be a bending force on the shaft and will cause bending moment. Additional bending stress will be induced and reactions at bearings A and B will occur. The reactions R_A and R_B can be calculated by considering the equilibrium. They are

$$R_A = \frac{b}{a+b} M \omega^2 r \qquad \ldots (6.2)$$

$$R_B = \frac{a}{a+b} M \omega^2 r \qquad \ldots (6.3)$$

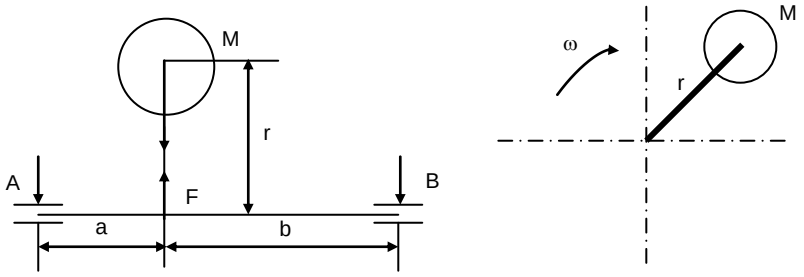

Figure 6.1 : Revolving Mass attached to a Horizontal Shaft

These reactions on bearings will rotate with the mass, hence will cause fatigue damage. The wear of bearing all over the circumference will also increase. The shaft will be subjected to bending moment whose maximum value will occur at the section where the mass M is connected to the shaft. The bending moment under the revolving mass will be

$$M = \frac{ab}{a+b} M \omega^2 r \qquad \ldots (6.4)$$

when the reactions at the supports become more than the tolerable limits of bearings, the balancing is done.

Example 6.1

A shaft of circular cross-section of diameter 50 mm is supported in two bearings at a distance of 1 m. A mass of 20 kg is attached to the shaft such that its centre of gravity is 5 mm from the axis. The mass is placed at a distance of 400 mm from left hand bearing. To avoid unequal wearing of bearings, the designer places the mass in the centre of the span. Calculate reactions at bearings, maximum bending moments and bending stresses if the shaft rotates at 750 rpm.

Solution

The force caused on shaft due to rotation = F

$$\omega = \frac{2\pi N}{60} = \frac{2\pi \times 750}{60} = 78.54 \text{ rad/s}$$

$$F = \frac{W}{g} \omega^2 r$$

Use $M = 20$ kg, $\omega = 78.54$ rad/s, $r = 5 \times 10^{-3}$ m

$$F = 20 \times (78.5)^2 \times 5 \times 10^{-3} = 616.85 \text{ N} \qquad \ldots (i)$$

Case I

Mass at a = 400 mm from left hand (LH) bearing

b = 1000 – 400 = 600 mm

$a + b$ = 1000 mm

A – left, B – right hand bearing (Figure 6.1)

$$\therefore \qquad R_A = \frac{b}{a+b} F$$

$$= \frac{600}{1000} \times 616.85$$

or $R_A = 370.1$ N . . . (ii)

and $R_B = F - R_A = 616.85 - 370.1$ . . . (iii)

or $R_B = 246.74$ N

$\therefore$ Maximum BM, $= R_A \,.\, a = 370.1 \times 400$

or $BM = 148.04 \times 10^3$ Nmm . . . (iv)

Bending stress is given by

$$\sigma_b = \frac{32\,BM}{\pi d^3}$$

where d = 50 mm = shaft diemeter

$$\sigma_b = \frac{32 \times 148.04}{\pi \times (50)^3} \times 10^3$$

or $\sigma_b = 12.06$ N/mm^2 . . . (v)

Case II

Mass at the centre of span, i.e. $a = b = 500$ mm

$\therefore$ $R_A = R_B = \dfrac{F}{2} = \dfrac{616.85}{2} = 308.425$ N

$\therefore$ Maximum BM, $\dfrac{F}{2} \times a = 308.425 \times 500 = 154.213 \times 10^3$ Nmm . . . (vi)

$\therefore$ $$\sigma_b = \frac{32\,BM}{\pi d^3}$$

$$= \frac{32 \times 154.213}{\pi \times (50)^3} \times 10^3$$

or $\sigma_b = 17.35$ N/mm^2 . . . (vii)

6.3 BALANCING OF A SINGLE REVOLVING MASS

Balancing is a process of the redistribution of the mass in the system such that the reactions at the bearings are within the tolerable limits of the bearings. There are two methods of achieving this.

System Method

The effects of an off-axis or eccentric mass connected to a rotating shaft, as brought out above, has to be nullified. One simple way by which this is achieved is by attaching another mass M_1 at a radius r_1, exactly opposite to M as shown in Figure 6.2. The shaft is rotating at an angular speed of ω.

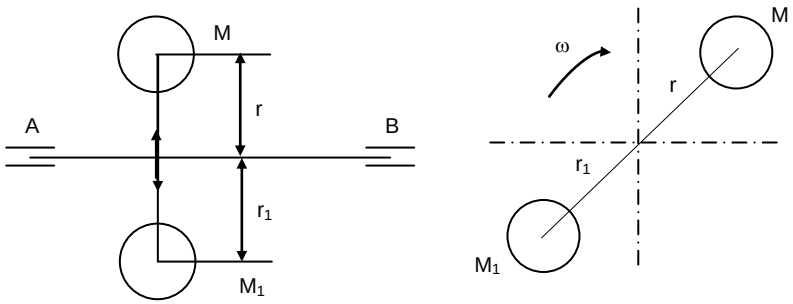

Figure 6.2 : Balancing of a Single Revolving Mass : System Method

The mass M_1 and its radius are so chosen that it is equal to the centrifugal force due to M, i.e.

$$F = \frac{M}{g}\,\omega^2\, r = \frac{M_1}{g}\,\omega^2\, r_1$$

which means that $M\,r = M_1\, r_1$ . . . (6.5)

If Eq. (6.5) is satisfied then the resultant force on the shaft and hence on bearing will be zero. Thus additional reaction or overload on the bearings is zero and $BM = 0$, hence no additional stress in the shaft will be induced. The system is now called **internally balanced**. Internal balance is achieved by adding a balancing mass exactly opposite to revolving mass which causes unbalance. Thus the disturbing and balancing masses (M and M_1, respectively) are in the same plane for internal balance and they satisfy the condition given by Eq. (6.5).

This method is used for balancing auto wheels, etc.

Second Method

In this method, instead of meutralising centrifugal force, the eccentricity or radius 'r' is reduced. By doing this, we intend to reduce the magnitude of the centrifugal force. This method is used for thicker discs like flywheel where it is possible to take out mass by shallow drilling. The side of the disc which consists of centre of gravity is called heavy side as shown in Figure 6.3(a). The opposite side to the heavy side is called light side. Since heavy side consists of more mass, the mass M_1 as given by the Eq. (6.5) can be taken out by drilling a shallow hole of diameter 'd' and depth 'b' as given by the following relation

$$\frac{\pi}{4}\, d^2\, b\, \rho = M_1$$

where 'b' is less than thickness of the disc and ρ is density of material.

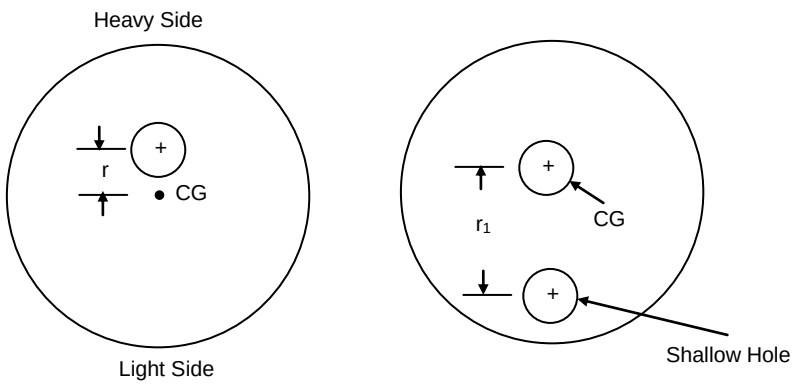

Figure 6.3 : Balancing of a Single Revolving Mass : Second Method

6.4 PROCEDURE FOR BALANCING

A thin disc like flywheel or a car wheel may be mounted on an axle or a shaft. It can be rotated by hand. The side which comes down can be marked. It is rotated again. If the same side comes down, this is heavy side and opposite to this is light side. If there is no force measuring device and rotating device, some mass can be mounted whenever it is possible on light side. The care should be taken that the mounting distance is as large as possible. If marked heavy side again comes down, more mass can be mounted on the light side. This process is repeated till any side comes down. Now it is farely balanced.

If there is a machine like wheel balancing machine, it indicates the magnitude of mass and the location where balancing mass should be mounted. These methods are trial and error methods and are time consuming methods. This cannot be used in industries where time available per piece is less. The industries have balancing machines which have

rotating device and transducers to provided magnitude of balancing mass and its location. In practice, we never aim the perfect balancing. The machine or the component is balanced till reactions are within a tolerable limit of the bearings.

SAQ 1

(a) What do you mean by unbalance and why it is due to?

(b) What do you mean by balancing?

(c) Why all the rotating systems are not balanced?

Example 6.2

In Example 6.1 find what weight of the balancing mass will achieve complete balance if the balancing mass has its centre of gravity at a distance of 7.5 mm from the axis of rotation. Will this be true for both positions of disturbing mass in Example 6.1.

Solution

Use (Eq. (18.5) with $M = 25$ kg, $r = 5$ mm, $r_1 = 7.5$ mm

$$\therefore \qquad 25 \times 5 = M_1 \times 7.5$$

$$\therefore \qquad M_1 = \frac{25 \times 5}{7.5} \times 1 = 16.67 \text{ kg} \qquad \ldots \text{(i)}$$

Since the Eq. (6.5) is independent of distance along the shaft the position of disturbing mass will not affect the magnitude of balancing mass. So balancing mass is same as at Eq. (i) for M at a = 400 mm or M in the centre of the span.

6.5 EXTERNAL BALANCING OF SINGLE REVOLVING MASS

The single revolving mass W connected to the shaft at radius r causes the unbalance force and reactions at the support. However, if two masses W_1 at radius r_1 and W_2 at radius r_2 are attached to the shaft, respectively in the same axial plane then also balancing of force due to rotation of W can be achieved. The condition of balance in case as shown in Figure 6.3 will be

$$\frac{W}{g}\,\omega^2 r = \frac{W_1}{g}\,\omega^2 r_1 + \frac{W_2}{g}\,\omega^2 r_2$$

The bending moments due to the forces due to rotating masses will be balanced if

$$\frac{W}{g}\,\omega^2 r\, a = \frac{W_1}{g}\,\omega^2 r_1 a_1 + \frac{W_2}{g}\,\omega^2 r_2 a_2$$

$$\frac{W}{g}\,\omega^2 r\, b = \frac{W_1}{g}\,\omega^2 r_1 b_1 + \frac{W_2}{g}\,\omega^2 r_2 b_2$$

a, b, a_1, b_1, a_2 and b_2 are shown in Figure 6.4.

The equations are written again by canceling out $\frac{\omega^2}{g}$ from both sides.

$$W\,r = W_1\,r_1 + W_2\,r_2 \qquad \ldots (6.6)$$

$$W\,r\,a = W_1\,r_1\,a_1 + W_2\,r_2\,a_2 \qquad \ldots (6.7)$$

$$W\,r\,b = W_1\,r_1\,b_1 + W_2\,r_2\,b_2 \qquad \ldots (6.8)$$

Thus the disturbing force or unbalanced force on the shaft is removed. There is no excess reaction at any of bearings *A* and *B*. This is known as **external balancing**.

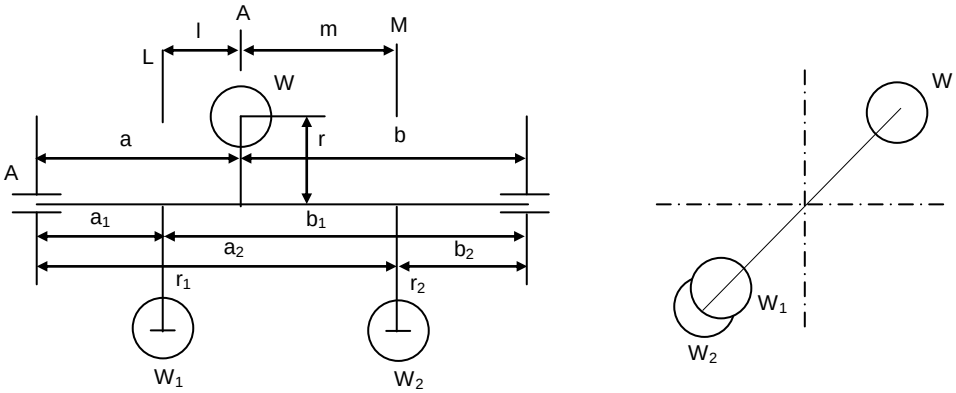

Figure 6.4 : External Balancing of Single Revolving Mass

The external balancing with two rotating masses (Figure 6.4) is resorted to when it is not possible to introduce the balancing mass exactly opposite to disturbing mass in the same radial plane. It may be worthwhile to note that a single mass placed in the same axial plane but in a different radial plane may satisfy the condition that $W\,r = W_1\,r_1$ ($W_2 = 0$) but W and W_1 will together cause a couple to act upon the shaft. This moment of the couple will tend to rock the shaft in the bearings. The balancing masses in the same axial plane but in two different radial planes can satisfy the conditions of zero force transverse to beam and zero moment. The Eqs. (6.6), (6.7) and (6.8) are such conditions.

If we define three radial planes for three masses W, W_1 and W as A, L and M, respectively and call distance between A and L as l and that between A and M as m then from Figure 6.3 it is seen that $a = a_1 + l$ and $b = b_2 + m$.

Then replacing a by ($a_1 + l$) and b by ($b_2 + m$) in Eqs. (6.7) and (6.8), respectively following are obtained.

$$W\,r\,l = W_2\,r_2\,(l + m)$$

or

$$W_2\,r_2 = W\,r\,\frac{l}{l+m} \qquad \ldots (6.9)$$

and

$$W_1\,r_1 = W\,r\,\frac{m}{l+m} \qquad \ldots (6.10)$$

Note that same results may be obtained if we take moments about sections L and M of the shaft. Also note that Eq. (6.6) implies that reactions at supports are zero. Eqs. (6.9) and (6.10) are more convenient to use along with Eq. (6.6) for solving a problem on external balancing. Again note that ($l + m$) is the distance between two radial planes in which balancing masses are placed. We understand that the Eqs. (6.9) and (6.10) are applicable to a situation as shown in Figure 6.3 but if both L and M are on one side of plane A then also these equations are true but one of W_1 and W_2 will be on the same side of the shaft as W . ($l + m$) can be denoted by d, so that

$$W_2\,r_2 = W\,r\,\frac{l}{d} \qquad \ldots (6.11)$$

and

$$W_1\,r_1 = W\,r\,\frac{m}{d} \qquad \ldots (6.12)$$

Example 6.3

A mass of 100 kg is fixed to a rotating shaft so that distance of its mass centre from the axis of rotation is 228 mm. Find balancing masses in following two conditions :

(a) Two masses – one on left of disturbing mass at a distance of 100 mm and radius of 400 mm, and other on right at a distance of 200 mm and radius of 150 mm.

(b) Two masses placed on right of the disturbing mass respectively at distances of 100 and 200 mm and radii of 400 and 200 mm

The masses are placed in the same axial plane.

Solution

For Case (a) see Figure 6.5.

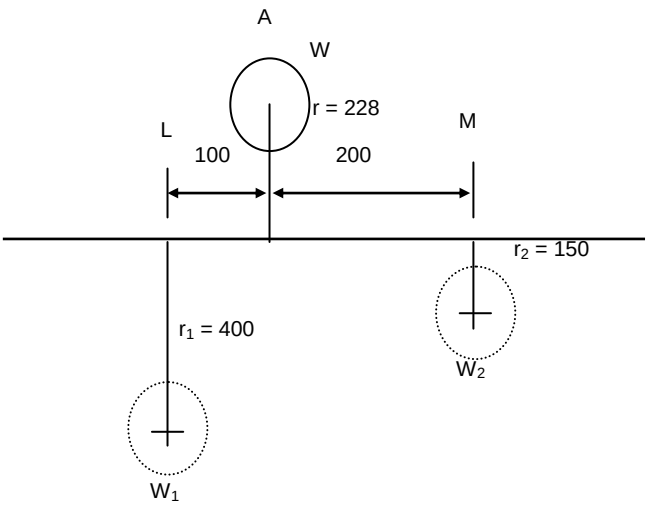

Figure 6.5 : Figure for Example 6.3

r = 228 mm, l = 100 mm, m = 200 mm, $d = l + m$ = 100 + 200 = 300 mm,

r_1 = 400 mm, r_2 = 150 mm, $\frac{W}{g} = 100$ kg, W_1 = ?, W_2 = ?

From Eq. (6.6)

$$W\,r = W_1\,r_1 + W_2\,r_2$$

$$100 \times 228 = W_1 \times 400 + W_2 \times 150 \qquad (g \text{ cancels out}) \qquad \ldots \text{(i)}$$

From Eq. (6.11)

$$W_2 \times 150 = 100 \times 228 \times \frac{100}{300}$$

$$\therefore \qquad W_2 = 50.67 \text{ kg} \qquad \ldots \text{(ii)}$$

From Eq. (6.12)

$$W_1 = \frac{100 \times 228}{400} \times \frac{200}{300}$$

$$\text{or} \qquad W_1 = 38 \text{ kg} \qquad \ldots \text{(iii)}$$

Check with Eq. (i)

22800 = 15200 + 7600

For Case (b) see Figure 6.6

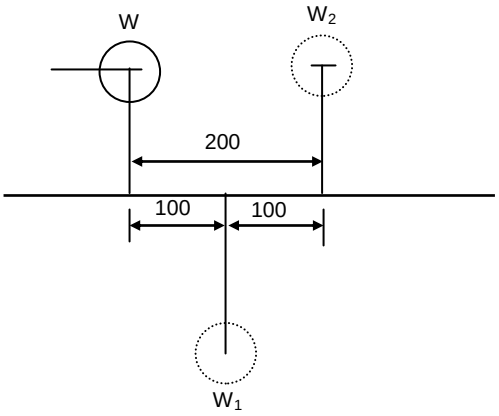

Figure 6.6 : Figure for Example 6.3

From Eq. (6.11)

$$W_2 = \frac{100 \times 228}{150} \times \frac{100}{100} \qquad (d = 100)$$

or $\quad W_2 = 152 \text{ kg}$ . . . (iii)

From Eq. (6.12)

$$W_1 = \frac{100 \times 228}{400} \times \frac{200}{100}$$

or $\quad W_1 = 114 \text{ kg}$ . . . (iv)

From Eq. (18.6)

$$100 \times 228 = 114 \times 400 + W_2 \times 150$$

or $$\frac{22800 - 45600}{150} = W_2$$

$$W_2 = -152 \text{ kg} \qquad \text{. . . (v)}$$

The negative sign indicates W_2 is on the other side of W_1.

6.6 STATIC AND DYNAMIC BALANCING

If the centre of gravity of all rotating masses is made to coincide with the axis of rotation, a state is achieved when bearings will carry no additional reaction. However, the masses may still cause some net bending moment on the shaft. Such bending moment will keep changing its plane and thus cause shaft to vibrate. Connecting the masses in such a way that bending moment is made to vanish will result in situation when shaft will not vibrate.

The balancing when only centers of gravity of attached mass system lies on axis of rotation is known as **static balancing**. The balancing with centers of attached mass system made to coincide with axis of rotation and no net bending moment acting on shaft is called **dynamic balancing**. In dynamic balancing forces and moments both are to be balanced.

6.7 SEVERAL MASSES REVOLVING IN SAME TRANSVERSE PLANE

A number of masses weighing W_1, W_2, etc. may be connected to the shaft such that their respective centres of gravity are at distances of r_1, r_2, etc. Each of these masses may be placed at its own angular position in the transverse or radial planes as depicted in Figure 6.7(a). Each will exert centrifugal force which will be proportional to the product

of mass and radius (i.e. $W\,r$). If we wish to ascertain if the net effect will be an unbalanced force, then we draw a polygon of forces. If the force polygon does not close then the resultant unbalance is equal to the closing side of the polygon. In this case the closing side is 5, *O*. Thus a force equivalent to 5, *O* in the direction 5 to *O* will close the polygon. Hence balancing mass may be connected parallel to line joining 5 and *O* and the length of this side will be the product of mass and radius.

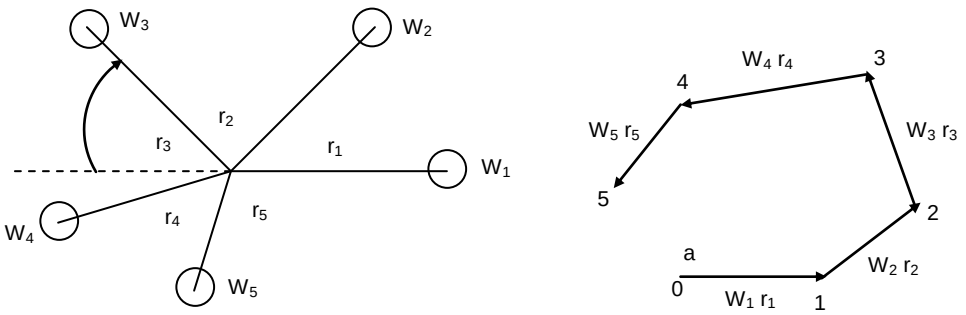

(a) **(b)**

Figure 6.7 : Several Masses Revolving in same Transverse Plane

Example 6.4

Four masses W_1, W_2, W_3 and W_4 at radii of 225 mm, 175 mm, 250 mm and 300 mm are connected at angles of zero, 45°, 75° and 120° from horizontal line as shown. If the shaft rotates at 500 rpm, find what unbalanced force acts upon the shaft and at what angle from mass W_1. If a mass to balance the system can be placed at a radius of 200 mm, find the weight of the mass.

Take W_1 = 1000 N, W_2 = 1500 N, W_3 = 1200 N and W_4 = 800 N

Solution

$$W_1\ r_1 = 2.25 \times 10^5$$

$$W_2\ r_2 = 2.625 \times 10^5$$

$$W_3\ r_3 = 3 \times 10^5$$

$$W_4\ r_4 = 2.4 \times 10^5$$

Figure 6.7 shows the orientation of disturbing forces with magnitudes (proportional to $W\,r$). Force polygon is shown in Figure 6.8(b). From the polygon the unbalanced $W\,r = 7.75 \times 10^5$ is at an angle of 207.5°.

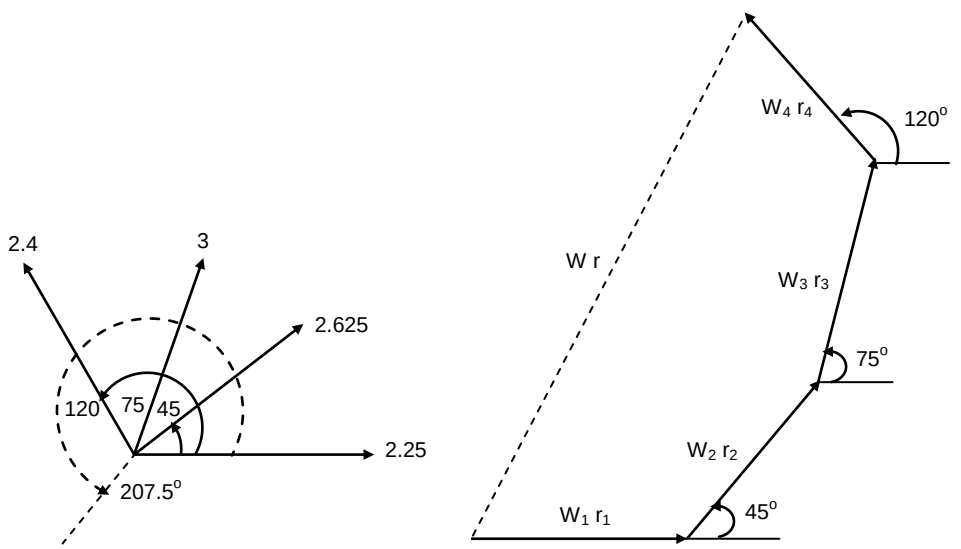

(a) **(b)**

Figure 6.8 : Figure for Example 6.4

The unbalanced force $= \dfrac{W}{g}\,\omega^2 r$

$$= \frac{7.75 \times 10^5}{9.81} \times \left(\frac{2\pi\ 500}{60}\right)^2 \times 10^{-3}$$

$$= 2.166 \times 10^5 \text{ N}$$

If radius at which balancing mass is placed is 200 mm.

Then $\quad W\,r = 7.75 \times 10^5$

$$W = \frac{7.75 \times 10^5}{200}$$

$$W = 3875 \text{ N}$$

Alternative method is to resolve $W\,r$ along horizontal and vertical direction and find their resultant.

$$W\,r\ (H) = (2.25 + 2.625 \cos 45 + 3 \cos 75 + 2.4 \cos 120)\ 10^5$$

$$= (2.25 + 1.856 + 0.7765 - 1.2)\ 10^5$$

$$= 3.6765 \times 10^5$$

$$W\,r\ (V) = (2.625 \sin 45 + 3 \sin 75 + 2.4 \sin 120)\ 10^5$$

$$= (1.856 + 2.9 + 2.0785)\ 10^5$$

$$= 6.83 \times 10^5$$

$$\therefore \quad W\,r = 10^5 \sqrt{[W\,r\ (H)]^2 + [W\,r\ (V)]^2}$$

$$= 10^5 \sqrt{[3.6765]^2 + [6.83]^2}$$

$$= 7.76 \times 10^5$$

$$\theta = \tan^{-1} \frac{W\,r\ (V)}{W\,r\ (H)} = \tan^{-1} \frac{6.83}{3.675} = \tan^{-1} 1.8583 = 61.7^{\circ}$$

Note that $W\,r$ is the resultant unbalance force which will act upward. The balancing mass will be placed opposite to it, i.e. downward as shown by broken line in Figure 18.7(a). 207.5° is the measured angle. The calculated value of the angle is $360 - 90 - 61.7 = 208.3^{\circ}$.

Compare the Values

From polygon construction

$$W\,r = 7.75, \quad \theta = 207.5^{\circ}$$

From calculation

$$W\,r = 7.76, \quad \theta = 208.3^{\circ}.$$

6.8 BALANCING OF SEVERAL MASSES IN DIFFERENT TRANSVERSE PLANES

To begin with we will name the planes in which masses revolve as *A*, *B*, *C* and *D*. The masses rotating in these planes are respectively W_a, W_b, W_c and W_d. The radii at which centers of gravity lie from axis of rotation in these planes are respectively r_a, r_b, r_c and r_d.

The angular separation between masses starting from *A* and *B* are α, β and γ. The balancing masses will be placed in two planes *L* and *M* which are between *A* and *B* and between *C* and *D*, respectively. The Figure 6.9 depicts the system. Distance between planes *L* and any of planes *A*, *B*, *C* and *D* is denoted by *l* with appropriate suffix. The same distances for plane *M* is denoted by *m*.

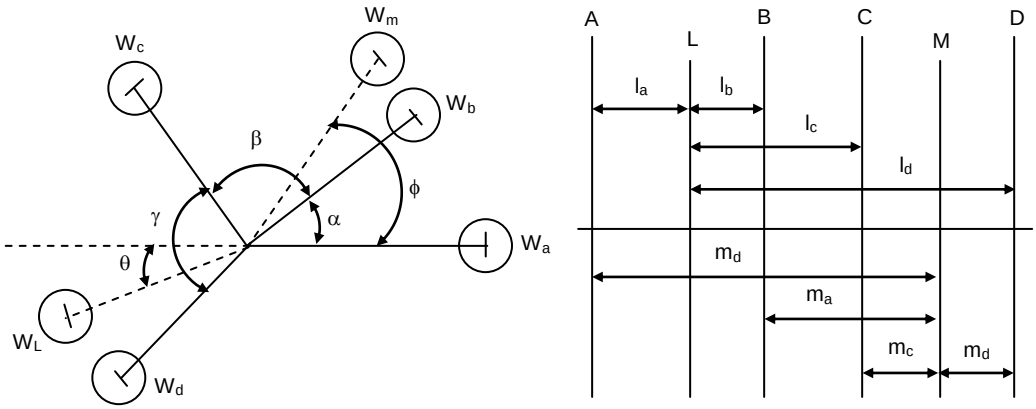

Figure 6.9 : Balancing of Several Masses in Different Transverse Plane

The method apparently is same as used in Section 6.4 in which balance masses in two planes *L* and *M* were found. So we need to repeat the procedure for mass in plane *A* and balancing mass in planes *L* and *M*. Thus we proceed in steps of planes *A*, *B*, *C* and *D*. A table of the kind shown below as Table 6.1 will be helpful. Rows will be dedicated to planes in which masses revolve which could be known or unknown.

For a mass of weight *W*, revolving at radius *r*, the force is proportional to *W r* as $\frac{\omega^2}{g}$ is a constant (Eq. (6.1)). Two planes *L* and *M* are chosen which are respectively at distances of *l* and *m* from the plane of revolving mass and balancing masses are placed in planes *L* and *M* as given by Eqs. (6.11) and (6.12). So the columns of the table will describe plane (*A*, *B*, *C*, etc.) weight *W*; radius *r*; force *W r*; distances *l* and *m*; balancing forces in *L* and *M*.

Table 6.1 : Calculation of Balancing Masses in Two Planes

Plane	**Weight** W	**Radius** r	**Force** $\frac{\omega^2}{g}$ $W\,r$	**Distance From**		**Balancing Force** $\frac{\omega^2}{g}$	
				Plane L l	**Plane** M m	**Plane** L	**Plane** M
A	W_a	r_a	$W_a\,r_a$	l_a	m_a	$\frac{W_a\,r_a\,m_a}{d}$	$\frac{W_a\,r_a\,l_a}{d}$
B	W_b	r_b	$W_b\,r_b$	l_b	m_b	$\frac{W_b\,r_b\,m_b}{d}$	$\frac{W_b\,r_b\,l_b}{d}$

The sign of the forces in last two columns will be decided by observation. Yet as a rule if a force is in the same direction as the disturbing force, then it will be positive and if in the opposite direction it will be negative. After the balancing forces have been calculated in planes *L* and *M* which will be parallel to forces in planes *A* and *B*, etc. they are combined to give a single resultant. Their inclination to force in plane *A* can be determined.

The above procedure will be followed in solving the example.

Example 6.5

In Figure 6.9 four masses W_a = 1000 N, W_b = 1500 N, W_c = 1200 N and W_d = 1300 N revolve respectively at radii of r_a = 225 mm, r_b = 175 mm, r_c = 250 mm and r_d = 300 mm in planes *A*, *B*, *C* and *D*. Two planes *L* and *M* are

selected to place balancing masses W_l and W_m at a radius of 600 mm. The masses W_b, W_c and W_d are respectively at angles of 45°, 75° and 135° from W_a and distances between planes are : l_a = 300 mm, l_b = 375 mm, l_c = 750 mm, l_d = 1500 mm, m_a = 1800 mm, m_b = 875 mm, m_c = 500 mm, m_d = 250 mm. Find the balancing masses and orientation of their radii from radius of mass W_a.

Solution

See Figure 6.9. Proceed as per Table 6.1. The distance between planes L and M, $d = l_d - m_d$ = 1500 – 875 = 825 mm.

Plane	Weight W N	Radius r mm	Force $\frac{\omega^2}{g} W r$	Distance of Plane From		Balancing Force $\frac{\omega^2}{g}$	
				Plane, L l (mm)	Plane, M m (mm)	Plane L Wrm/d Nmm	Plane M Wrl/d Nmm
A	10^3	225	2.25×10^5	300	1800	-6.48×10^5	1.08×10^5
B	1.5×10^3	175	2.625×10^5	375	875	-3.675×10^5	-1.575×10^5
C	1.2×10^3	250	3.00×10^5	750	500	-2.4×10^5	-3.6×10^5
D	1.3×10^3	300	3.90×10^5	1500	250	1.56×10^5	-9.36×10^5

The last two columns show balancing forces for those in planes A and B, etc. Hence, these forces will act in opposite direction to W_a, W_b, etc. four forces in planes L and M will be equal to one force by a single rotating mass. Thus, two balancing masses – one each in planes L and M will be obtained.

Balancing forces in L plane are shown in Figure 6.10, along with disturbing forces W_a, W_b, W_c and W_d. To find resultant of all balancing forces we go for their components along horizontal and vertical directions. The relevant angles are shown in figure.

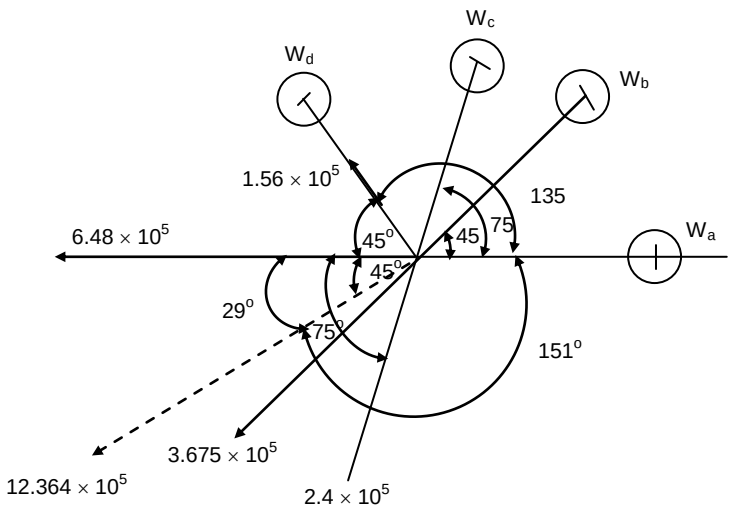

Figure 6.10 : Figure for Example 6.5

$$Wr(H) = 6.48 \times 10^5 + 3.675 \times 10^5 \cos 45 + 2.4 \times 10^5 \cos 75 + 1.56 \times 10^5 \cos 45$$

$$= (6.48 + 2.6 + 0.621 + 1.1)\, 10^5$$

$$= 10.8 \times 10^5$$

$$Wr(V) = 3.675 \times 10^5 \sin 4.5 + 2.4 \times 10^5 \sin 75 - 1.56 \times 10^5 \sin 45$$

$$= (2.6 + 2.32 + 1.1)\, 10^5$$

$$= 6.02 \times 10^5$$

$$W\,r\ (\text{Resultant}) = \sqrt{[W\,r\ (H)]^2 + [W\,r\ (V)]^2}$$

$$= \sqrt{116.64 + 36.24} \times 10^5$$

$$= 12.364 \times 10^5 \text{ Nmm}$$

With $\quad r = 600$ mm, $W = \dfrac{12.364 \times 10^5}{600} = 2060.7$ N

The angle with

$$W_a = \tan^{-1} \frac{W\,r\ (V)}{W\,r\ (H)} = \tan^{-1} \frac{6.02}{10.8} = \tan^{-1} 0.5574 = 29^{\circ}$$

Balancing forces in M plane are shown in Figure 6.11 along with disturbing forces W_a, W_b, W_c and W_d. The resultant is found as above.

$$W_r\ (H) = (1.08 + 1.57 \times \cos 135 + 3.6 \cos 105 + 9.36 \cos 45)\ 10^5$$

$$= (1.08 - 1.11 - 0.93 + 6.62)\ 10^5$$

$$= 5.66 \times 10^5$$

$$W_r\ (V) = (1.57 \sin 135 + 3.6 \sin 105 + 9.36 \sin 45)\ 10^5$$

$$= (1.11 + 3.48 + 6.62)\ 10^5$$

$$= 11.2 \times 10^5$$

$$\therefore \qquad W_r\ (R) = \sqrt{5.66^2 + 11.2^2} \times 10^5$$

$$= 12.55 \times 10^5$$

At r = 600 mm, the balancing mass in M plane will be

$$W = \frac{12.55 \times 10^5}{600} = 2091 \text{ N}$$

This will be placed at angle θ with direction of W_a

$$\theta = \tan^{-1} \frac{11.2}{5.66} = \tan^{-1} 1.98 = 63.2^{\circ}$$

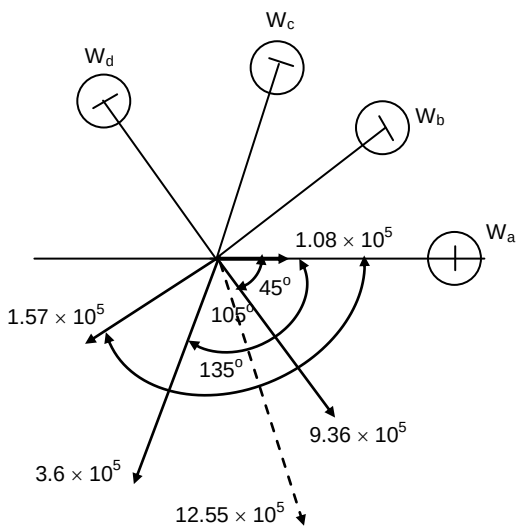

Figure 6.11 : Figure for Example 6.5

Thus we see that for balancing the revolving masses in planes *A*, *B*, *C* and *D* we have to connect two masses of 2060.7 N and 2091 N, respectively which are between *A* and *B* and between *C* and *D*.

SAQ 2

(a) What do you understand by balancing of revolving masses?

(b) If not balanced what effects are induced on shaft bearing system due to unbalanced rotating masses.

(c) How do you achieve balance of rotating masses which lie in parallel transverse planes of a shaft?

(d) Five masses *A*, *B*, *C*, *D* and *E* revolve in the same plane at equal radii. *A*, *B* and *C* are respectively 10, 5 and 8 kg in mass. The angular direction from *A* are 60°, 135°, 210° and 270°. Find the masses *D* and *E* for complete balance.

(e) A shaft carries three pulleys *A*, *B* and *C* at distance apart of 600 mm and 1200 mm. The pulleys are out of balance to the extent of 25, 20 and 30 N at a radius of 25 mm. The angular position of out of balance masses in pulleys *B* and *C* with respect to that in pulley *A* are 90° and 210° respectively. It is required that the pulleys be completely balanced by providing balancing masses revolving about axis of the shaft at radius of 125 mm. The two masses are to be placed in two transverse planes midway between the pulleys.

6.9 SUMMARY

The masses that are connected to shaft and whose centers of gravity do not lie on axis of the rotation, revolve about the axis at constant radius. Moving in circular path they are subjected to centrifugal force which may cause bending stress in the shaft and rotating reactions in the bearing. To nullify their effects, revolving masses can be provided in the plane of disturbing mass or in some other parallel plane. If balancing masses are placed in the plane of unbalance for single mass, only one balancing plane is required otherwise two balancing planes shall be required. The balancing process requires that both the bending forces and moments on the shaft be made to vanish.

6.10 ANSWERS TO SAQs

SAQ 2

(d) Since the radii are equal, the forces are proportional to masses. The Figure 6.11 shows the forces and their orientation. Since the system is balance the force polygon must close whereby we can find the unknown forces and corresponding masses. We plot only masses hence sides of polygon will directly give the masses.

In the force (proportional force) polygon known values are written inside the polygon and measured values are written outside.

Mass *D* = 8 kg

Mass *E* = 6 kg

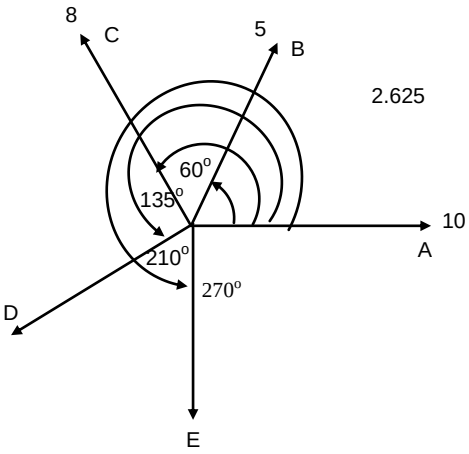

Orientation of Forces

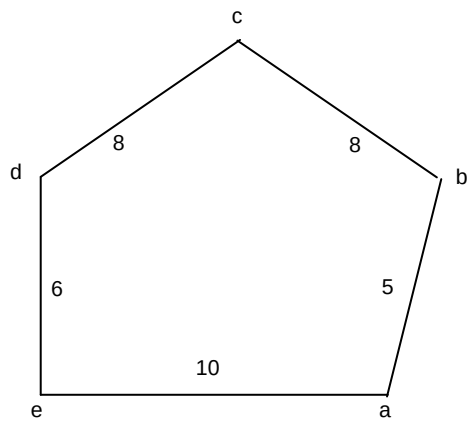

Proportional Force Polygon

Figure 6.11

SAQ 5

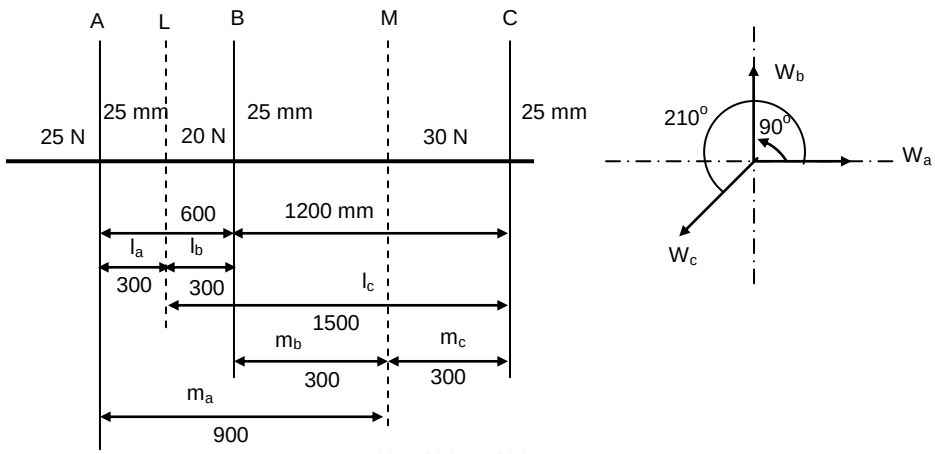

Plane	*W* (N)	*r* (mm)	*Wr* (Nmm)	Distance From		Balancing Force	
				L (*l*)	*M* (*m*)	*L* *Wr m/d*	*M* *Wr l/d*
A	25	25	625	300	900	– 468.75	156.25
B	20	25	500	300	300	– 125.00	– 125.00
C	30	25	750	1500	300	+ 187.50	– 375.00

L Plane

$$Wr(H) = 468.75 + 187.5 \cos 30$$

$$= 631.13$$

$$Wr(V) = 125 + 187.5 \sin 30$$

$$= 218.75$$

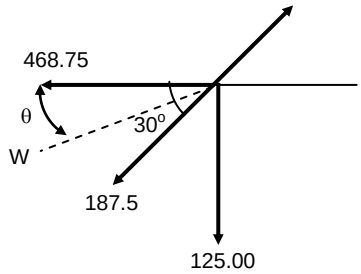

$$Wr(R) = \sqrt{631.13^2 + 218.75^2}$$

$$= 668 \text{ Nmm}$$

$$r = 125 \text{ mm}$$

$$\therefore \qquad W = \frac{668}{125} = 5.34 \text{ N}$$

$$\therefore \qquad \theta = \tan^{-1} \frac{218.75}{631.13} = \tan^{-1} 0.347 = 19.14^{o}$$

M Plane

$$Wr(H) = 156.25 + 375 \cos 30 = 481$$

$$Wr(V) = 375 \sin 30 - 156.25 = 31.25$$

$$Wr(R) = \sqrt{481^2 + 31.25^2} = 482$$

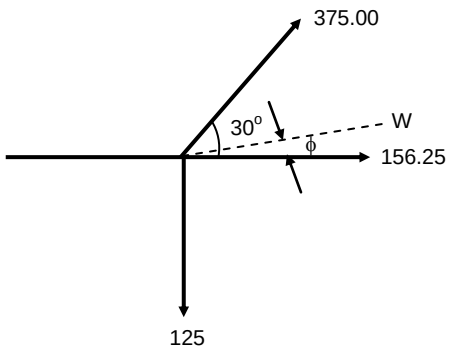

$$r = 125 \text{ mm}$$

$$\therefore \qquad W = \frac{482}{125} = 3.86 \text{ N}$$

$$\tan \phi = \frac{31.25}{481} = 0.065$$

$$\phi = 3.7^{o}$$